USN | | | | | | | | | | |

[24ESCE12]

FIRST SEMESTER B.Tech EXAMINATION, JANUARY - 2025

ENGINEERING MECHANICS

Time: 3 Hours **Maximum Marks: 100**

Instructions: i. Missing data may be suitably assumed.

ANSWER ALL QUESTIONS

			Blooms Level	CO	Marks
		PART-A	**5X2=10**		
1.	**a.**	What are coplanar concurrent forces.	L-2	CO1	**02**
	b.	Define co-efficient of friction.	L-1	CO2	**02**
	c.	Define centroid of an area.	L-1	CO3	**02**
	d.	State the perpendicular axis theorem.	L-1	CO4	**02**
	e.	Write the equations of static equilibrium.	L-2	CO5	**02**
		PART-B	**6X5=30**		
2.	**a.**	The resultant of two forces, one of which is double the other has a resultant of 260N. If the direction of the larger force is reversed, the resultant reduces to 180N. Determine the magnitude of the forces and the angle between the forces?	L-3	CO1	**05**
		OR			
	b.	The guy wire of the electric pole makes 60 degree to the horizontal and is subjected to 20 kN force. Find the horizontal and vertical components of the force?	L-3	CO1	**05**
3.	**a.**	State the laws of static friction.	L-3	CO2	**05**
		OR			
	b.	A body of weight 100N is placed on a rough horizontal plane. Determine the co-efficient of friction if a horizontal force of 60N just causes the body to slide over the horizontal plane.	L-3	CO2	**05**
4.	**a.**	Prove that centroid of rectangle is at the centre by first principle.	L-4	CO3	**05**
		OR			

JAIN (Deemed-to-be University) Learning Resource Centre Jain Global Campus Ramanagar-112

	b.	locate the centroid of the uniform wire bent as shown in fig 4b. 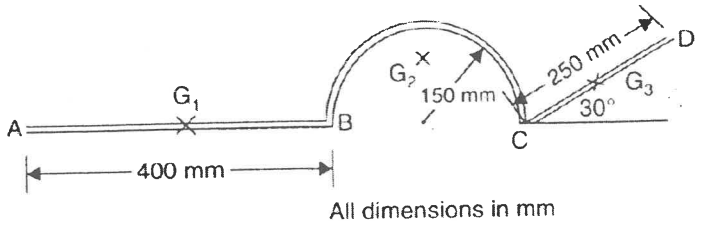 Figure 4b	L-4	CO3	**05**
5.	**a.**	Find the Moment of inertia for the composite section shown in Fig 5a. about the axis AB. 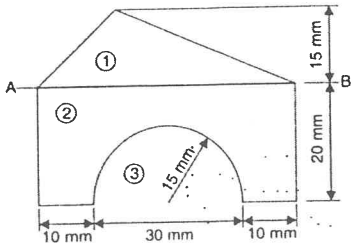 Figure 5a	L-4	CO4	**05**
		OR			
	b.	Determine the moment of inertia for the shaded area about the edge LM as shown in fig 5b 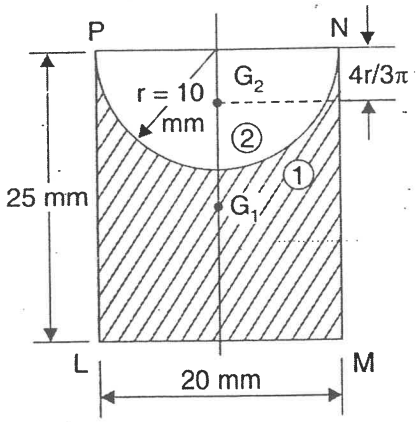 Figure 5b	L-4	CO4	**05**
6.	**a.**	A particle moves along a straight line such that its position is defined by $s = (t^3 - 3t^2 + 2)$ m. Determine the velocity and acceleration of the particle when t = 4s	L-4	CO5	**05**
		OR			
	b.	Explain displacement-time graphs.	L-4	CO5	**05**
7.	**a.**	Illustrate the five types of force system.	L-3	CO6	**05**
		OR			
	b.	Determine the resultant of the force acting on a hook shown in Fig 7b	L-4	CO6	**05**

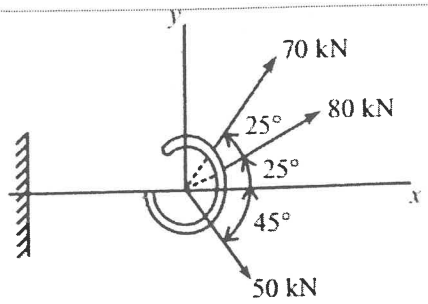

Figure 7b

		PART-C	**6X10=60**		
8.	**a.**	List the types of beams and explain each with a neat sketch.	L-3	CO1	**10**
		OR			
	b.	Determine the magnitude and direction of the resultant along with the components of the forces made by the given force system shown in Figure 8b	L-4	CO1	**10**

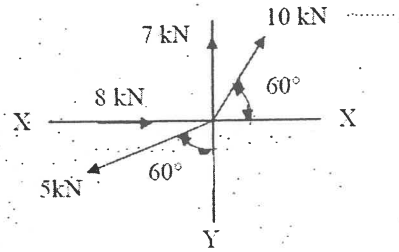

Figure 8b

9.	**a.**	A 40 Kg mass is placed on the inclined plane making angle of 30 with horizontal as shown in the figure 9a. A push "P" is applied parallel to the plane. If co-efficient of static friction between the plane & the mass is 0.25, find the maximum & minimum value of P between which the mass will be in equilibrium.	L-4	CO2	**10**

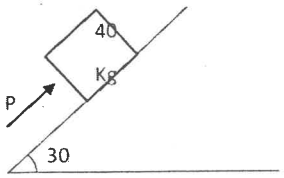

Figure 9a

		OR			
	b.	Determine the force in each member of the truss shown in Figure 9b. State if the members are in tension or compression.	L-3	CO2	**10**

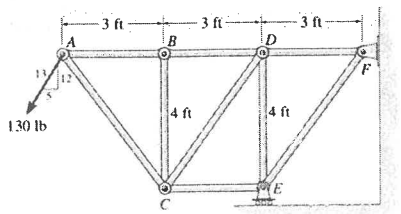

Figure 9b

10.	**a.**	Determine the position of the centroid of I-section as shown in Fig 10a. 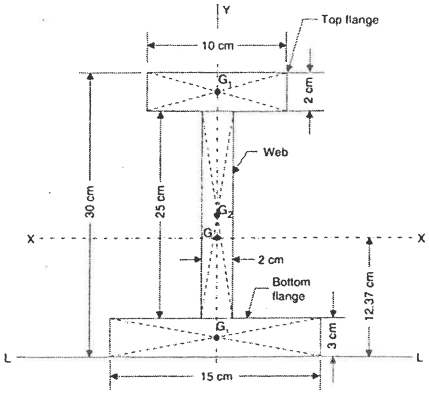 Figure 10a	L-4	CO3	**10**
		OR			
	b.	Determine the co-ordinates of centroid with respect to 'O' of the section as shown in the figure 10b. 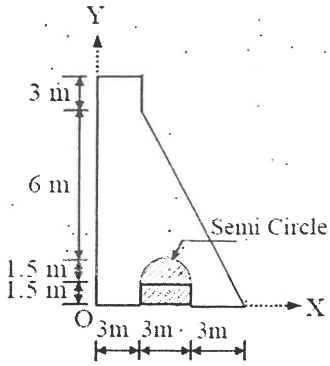 Figure 10b	L-4	CO3	**10**
11.	**a.**	Calculate the moment of inertia about horizontal and vertical gravity axes (Ixx and Iyy) of the section shown in Fig 11a. 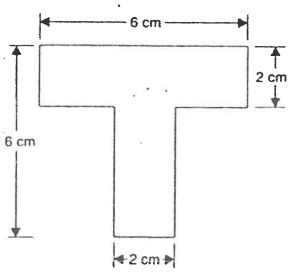 Figure 11a	L-4	CO4	**10**
		OR			
	b.	Find the moment of inertia for the symmetrical I-section shown in the figure 11b about axis passing through its centroid	L-4	CO4	**10**

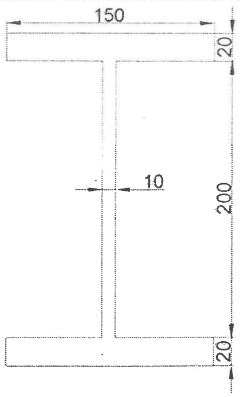

Figure 11b

12.	**a.**	A car moves in a straight line such that for a short time its velocity is defined by $v = (3t^2 + 2t)$ m/s, where t is in seconds. Determine its position and acceleration when t = 3 s. (When t = 0, s = o).	L-4	CO5	**10**
		OR			
	b.	A stone is dropped into a well. The sound of the splash is heard 3.63 seconds later. How far below the ground is the surface of water in the well? Assume the velocity of sound as 331 m/s.	L-4	CO5	**10**
13.	**a.**	Find the forces acting in all members of the truss shown in fig 13a.	L-4	CO6	**10**

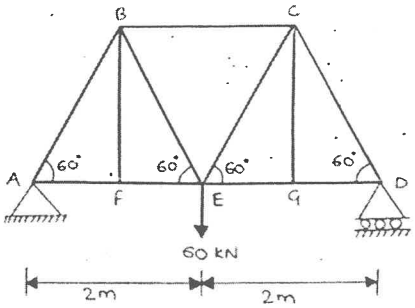

Figure 13a

		OR			
	b.	A wheel has five equally spaced radial spokes, all in tension as shown in fig 13b. If the tensions of three consecutive spokes are 500 N, 700 N and 600 N respectively, find the tensions in the other two spokes.	L-4	CO6	**10**

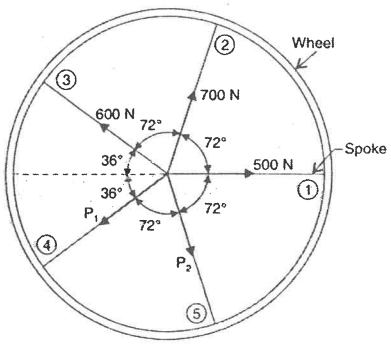

Figure 13b